

Manual

BLE caberQU v4.6

USB-C to USB-C cable tester

USB Type-C === USB Type-C

caberqu.com

Traunmüller


BLE caberQU

1. Safety notes

Please read these instructions carefully and observe all references made in these instructions to guarantee save, reliable use and a long life of the device. Keep this manual ready at hand and pass it on to other users of the device.

1.1. Intended use

This cable tester is intended exclusively for testing a single USB-C to USB-C cable. A different use, or one going beyond this, is deemed as not intended and can lead to injuries and damages. Please note that serving and/or connection errors lie outside of our sphere of influence.

1.2. Safety instructions

The entire product may not be converted and/or changed. This product is not intended for commercial use or for medical and special applications, where the failure of the product can cause injuries, mortalities or considerable material damages. Claims of any kind due to damages from improper use or non-observance of safety instructions are excluded.

This product is not a toy and may not be used by children. Remove packaging material from the reach of children. Children often underestimate dangers or do not recognize them at all. This device is not intended to be used by persons (including children) with restricted sensory, physical or mental abilities or lack of experience and/or knowledge, unless they are supervised by a person responsible for their safety or received instructions from the person on how to use the device and they have understood the resultant dangers. Only operate the device with a tested and certified power supply and cable. Don’t put any object onto the device. Do not disassemble the device and do not try to repair it yourself. Do not insert any items, which are not intended for its use, into the openings of the product. This could lead to an electrical short-circuit and a resultant fire. Only use a dry cloth for cleaning the device. Do not use the device when it shows visible damage. The device is sensitive to electrostatic discharge. Connect cables gently and slowly to save the connectors.

- Do not use the BLE caberQU cable tester if it is damaged.
- This device is only for use inside dry and clean rooms.
- This device must be protected from moisture, splash water and too high/low temperatures.
- Keep out of reach for children.
- Do not touch the device with anything electrically conductive. Never connect the device to a live wiring.
- Do not connect the BLE caberQU cable tester to any kind of other device.

2. FCC Compliance Statement

This device complies with part 15 of the FCC Rules. Operation is subject to the following two conditions:

1. This device may not cause harmful interference, and
2. This device must accept any interference received, including interference that may cause undesired operation.

WARNING: Changes or modifications to this unit not expressly approved by the party responsible for compliance could void the user's authority to operate this equipment.

NOTE: This equipment has been tested and found to comply with the limits for a Class B digital device, pursuant to Part 15 of the FCC Rules. These limits are designed to provide reasonable protection against harmful interference in a residential installation. This equipment generates, uses and can radiate radio frequency energy and, if not installed and used in accordance with the instructions, may cause harmful interference to radio communications. However, there is no guarantee that interference will not occur in a particular installation. If this equipment does cause harmful interference to radio or television reception, which can be determined by turning the equipment off and on, the user is encouraged to try to correct the interference by one or more of the following measures:

- Reorient or relocate the receiving antenna.
- Increase the separation between the equipment and the receiver.
- Connect the equipment into an outlet on a circuit different from that to which the receiver is connected.
- Consult the dealer or an experienced radio/TV technician for help.
- The device has been evaluated to meet general RF exposure requirement.
- The device can be used in portable exposure condition without restriction.

To maintain compliance with FCC's RF Exposure guidelines, this equipment should be installed and operated with minimum 20cm distance between the radiator and your body: Use only the supplied antenna.

FCC ID:2BM9B-1ZBLECABERQU

3. EU Declaration of Conformity

Directive 2014/53/EU:
Short text of the Declaration of conformity: Peter Traunmüller eU hereby declares that the BLE caberQU device conforms to the fundamental requirements and other relevant provisions of directive 2014/53/EU. This product is allowed to be used in all EU member states. The full statement of conformity for your model can be viewed on our website: www.caberqu.com

4. MIC Certification

Compliant with Japan Radio Law. It has been certified as conforming to technical standards. Unauthorized modifications to the device may result in a breach of Japanese Radio Law and could be subject to legal penalties. This product conforms to applicable environmental regulations in Japan, including proper disposal and recycling guidelines.

Certification Number: 214-250008

R214-25008

Function	Frequency Bands	Max. RF output power
Wi-Fi	2.412 GHz – 2.462 GHz	802.11b: 4mW/MHz 802.11g: 4mW/MHz 802.11n20: 4mW/MHz 802.11n40: 3mW/MHz
Wi-Fi (Japan only)	2.484 MHz	3mW/MHz
BLE (Bluetooth)	2.402 GHz - 2.480 GHz	2mW

5. Quickstart Guide

5.1. Power Supply

Connect a USB-C cable to the top port (PWR) using a 5V supply, with at least 500mA current capability.
Important: Do not connect power to ports **I** or **II**.

5.2. Setup

The screen will light up and guide you to correctly insert the cable you want to test. Plug both ends of a USB-C to USB-C cable into the ports **I** and **II**. The digital display will show three dials for:

Maximum data transmission speed
Maximum power
Cable health percentage

5.3. Measurement

Screen 1 will display an overview of your cable's health, speed, and power capabilities.
Screen 2 will show specifications such as USB standards (USB1.1 to USB4), voltage range (5V to 48V), current (0.5A to 5A), and connector pinout.
Screen 3 displays raw data, including each connected pin, Vbus resistance, and eMarker information.

5.4. App Support

Download the free BLE caberQU app for Android and iOS from Google Play and the Apple Store. The app enhances functionality, providing access to an online database, extra cable details, and save/export options.

6. Usage

Power supply

Use a USB-C cable to supply power to the BLE caberQU via the top port (**PWR**). Use a 5V supply with a current capability of 500 mA or above. Never connect any device to ports **I** or **II**.

Insert both ends of a USB-C to USB-C cable into the BLE caberQU. If the resistance between the Vbus pins is below 1000 mΩ, it will start a measurement of cable parameters between connector **II** and connector **I**.
The cable tester can not detect special function cables, any cables with active driving electronics or cables with optical transmission elements. Refer to page 12 for manual cable detection.

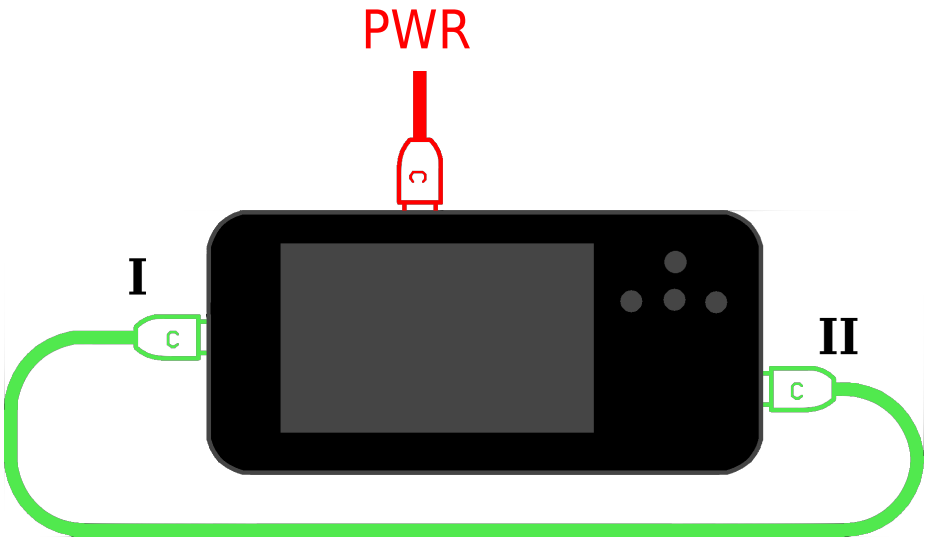

7. Device overview

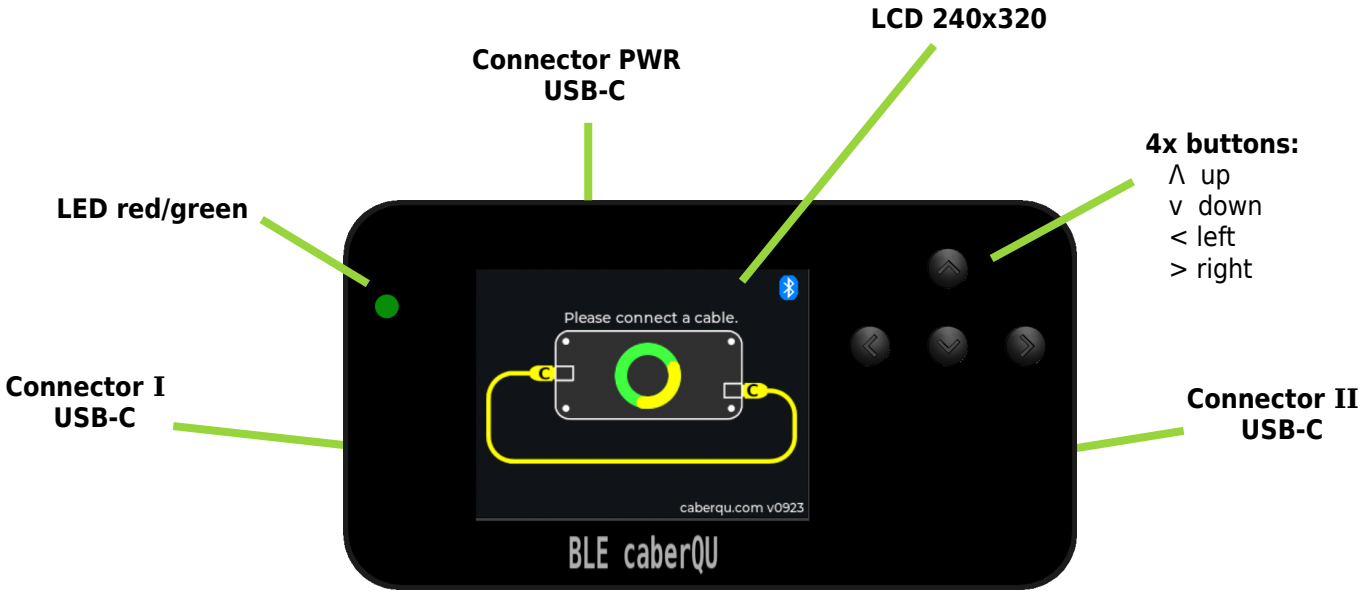

8. Replacement parts

Each BLE caberQU component can be replaced with a genuine replacement part from https://ble.caberqu.com/parts



9. Useful cable variants

While there are many cables for different applications, only a few types are most common.

9.1. USB data transmission:

0 **Gbit/s:** No data transmission possible, charging only
0.48 GBit/s: Regular USB 2.0 cable
20 **GBit/s:** USB 3.2 “superspeed” cable
40 **Gbit/s:** USB 4 cable

9.2. USB power transmission (incl. USB Power delivery [PD]):

60 W: Minimal specified power, only works if resistance is plausible
100 W: Maximum PD3.0 power rating (20V@5A)
240 W: Maximum PD3.1 power rating (48V@5A), cables are specified for 50V (250W)

9.3. USB alternate modes (Thunderbolt, DisplayPort, …)

Enabled: The cable enables the USB connection to carry non-USB signals. This can be Thunderbolt (TB), DisplayPort (DP) or other non standardized protocols which have to be agreed on by the devices connected.

9.4. USB Audio adapter accessory mode:

Enabled: The cable features the necessary pins and connects CC1 and CC2 straight through so that a source can detect a sink with the necessary resistors attached. This also works for devices having the debug accessory mode resistors attached.

10. USB-C connector summary

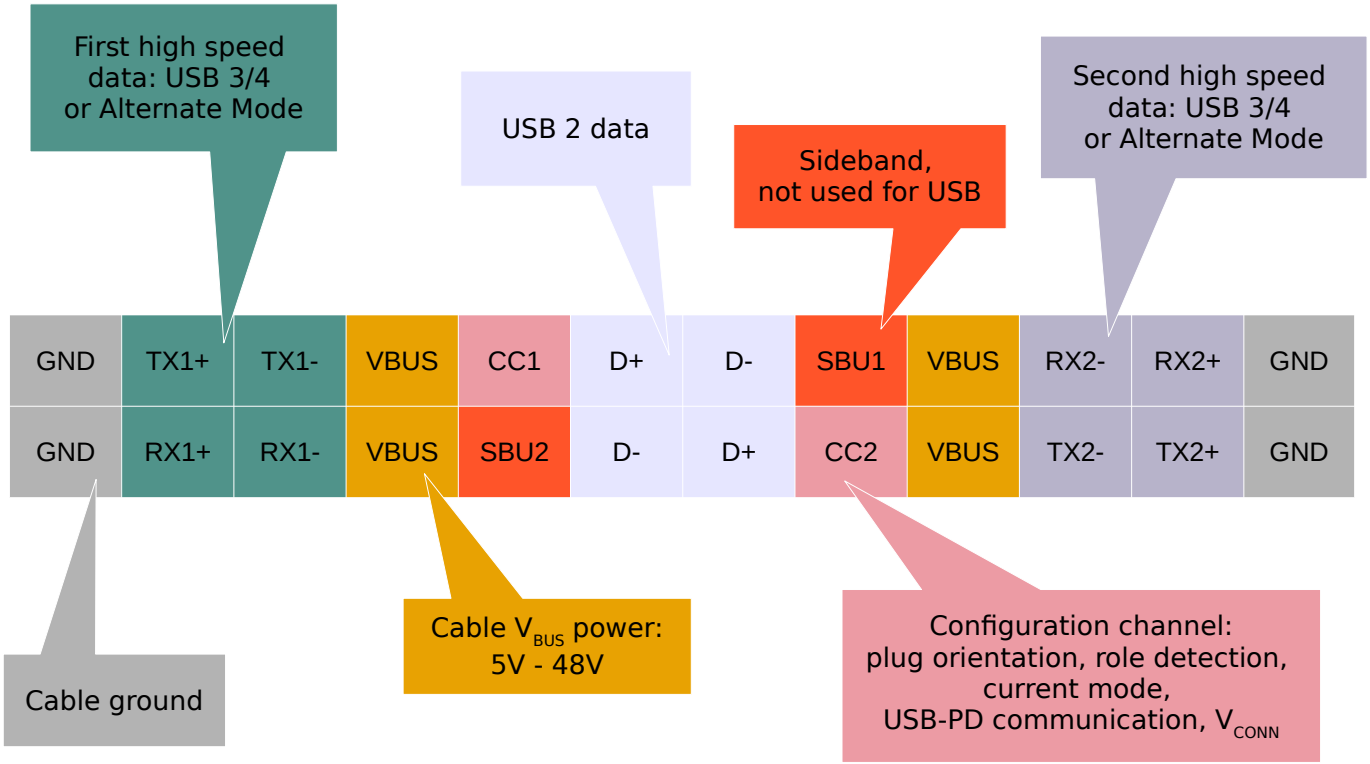

11. App support

The free BLE caberQU app can be downloaded for Android and iOS from google play store and apple store respectively. It extends the BLE caberQU functionality with additional cable details via an online database as well as saving and exporting options.



Update mode

In order to stay updated with new revisions of the USB standard, the BLE caberQU should be regularly updated. Without a cable connected: **press > five times within 2 seconds** and follow the instructions provided in the app.

12. Special menu functions

Disable Bluetooth (BLE)

Without a cable connected: **press < once** to disable Bluetooth.

Demo mode

Without a cable connected: **press V five times within 2 seconds** to start a demo mode. The BLE caberQU will go through a full measurement, analysis and display flow. Unplug unit to end the demo mode.

Manual cable detection

To trigger a manual cable detection, **press Λ once** to force the readout of any connected cable. This can be used with broken, out of spec or other specialized cables, but may provide inaccurate results due to missing parameters.

https://ble.caberqu.com/app

13. Measurement flowchart

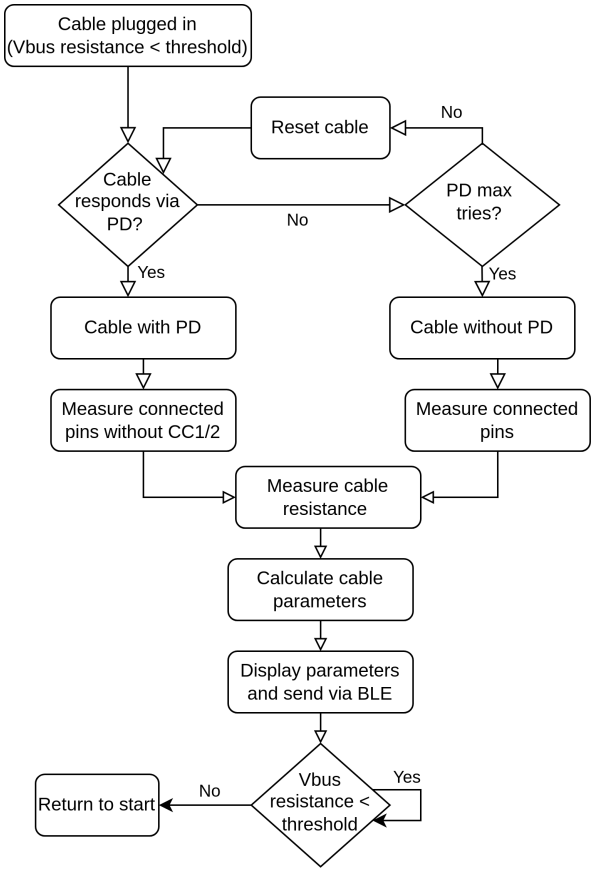

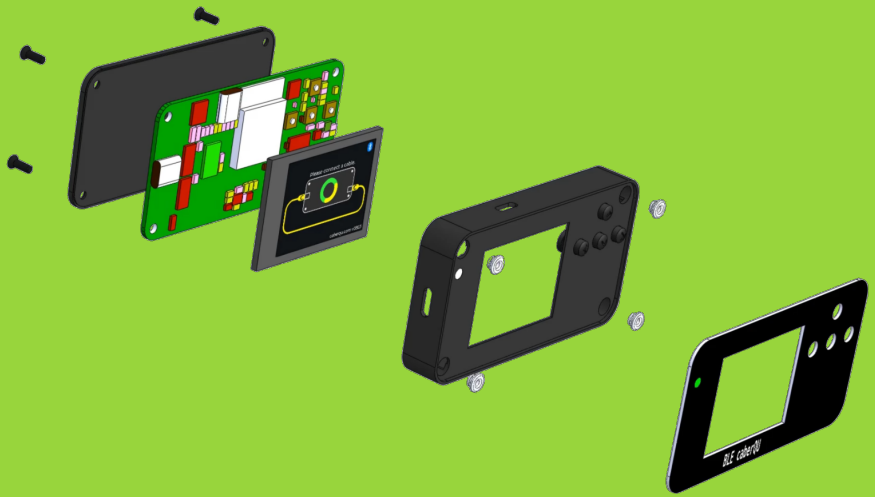
BLE caberQU

14. Warranty

- We as the manufacturer have no influence on installation, therefore warranty of the product only applies to the product.
- Please contact your dealer and provide your sales slip, if any fault or damage is detected on your device.
- Alternatively you can contact us directly:
- Peter Traunmüller eU, Arnleitnerweg 13, 4020 Linz, AUSTRIA, Tel: +4369981148006, E-Mail: info@caberqu.com, Web: caberqu.com
- We as the manufacturer are not liable for damages to persons or property caused by improper installation or operation not described in this manual.
- Any use other than described in this user manual is not permitted, and causes loss of warranty, loss of guarantee, and non-liability.
- We reserve our right for misprints and changes of the device, packing, or user manual.

Exclusion of liability:
The firmware and/or hardware may be changed at any time without prior notice. It is possible that parts of these instructions, technical data and images in this manual differ partly from the product in your possession. All points described in these instructions only serve the purpose of clarification and must not inevitably correspond to a certain situation. Legal claims cannot be made on the basis of this manual.

Troubleshooting:

Problem	Solution
The tester does not work.	Use the right cable and supply. Return device if broken.
Which pins have to be connected?	Vbus resistance needs to be below the threshold for a measurement to be started.
Other questions?	Contact your dealer or visit caberqu.com for more info.

Technical data

Dimensions: 90x48x13 mm

Weight: approx. 50 g

Power supply: USB-C 5V ⎓ 500mA

Operational and storage temperature:
+5°C to +35°C

Relative humidity: max. 90 %

FCC ID: 2BM9B-1ZBLECABERQU



Disposal of old electronic equipment:
Devices marked with this symbol are subject to the European Directive 2012/19/EC. All electrical appliances and old electrical appliances must be disposed of separate from the municipal waste stream via designated collection facilities appointed by the government or the local authorities You avoid environmental damage with the proper disposal of old electrical equipment.

Environmental and Disposal Guidelines:
Do not dispose of this product in regular household waste. Follow local electronic waste disposal guidelines.
For information on how to recycle or dispose of this product, contact your local municipality or visit https://caberqu.com/contact-us

CE With the CE sign we ensure, that the product conforms to the basic standards and directives.

Peter Traunmüller eU
Arnleitnerweg 13, 4020 Linz, AUSTRIA
E-Mail: info@caberqu.com
Tel: +43 699 811 4800 6
Web: caberqu.com

22 PAP

Traunmüller

V4.6.4 0425